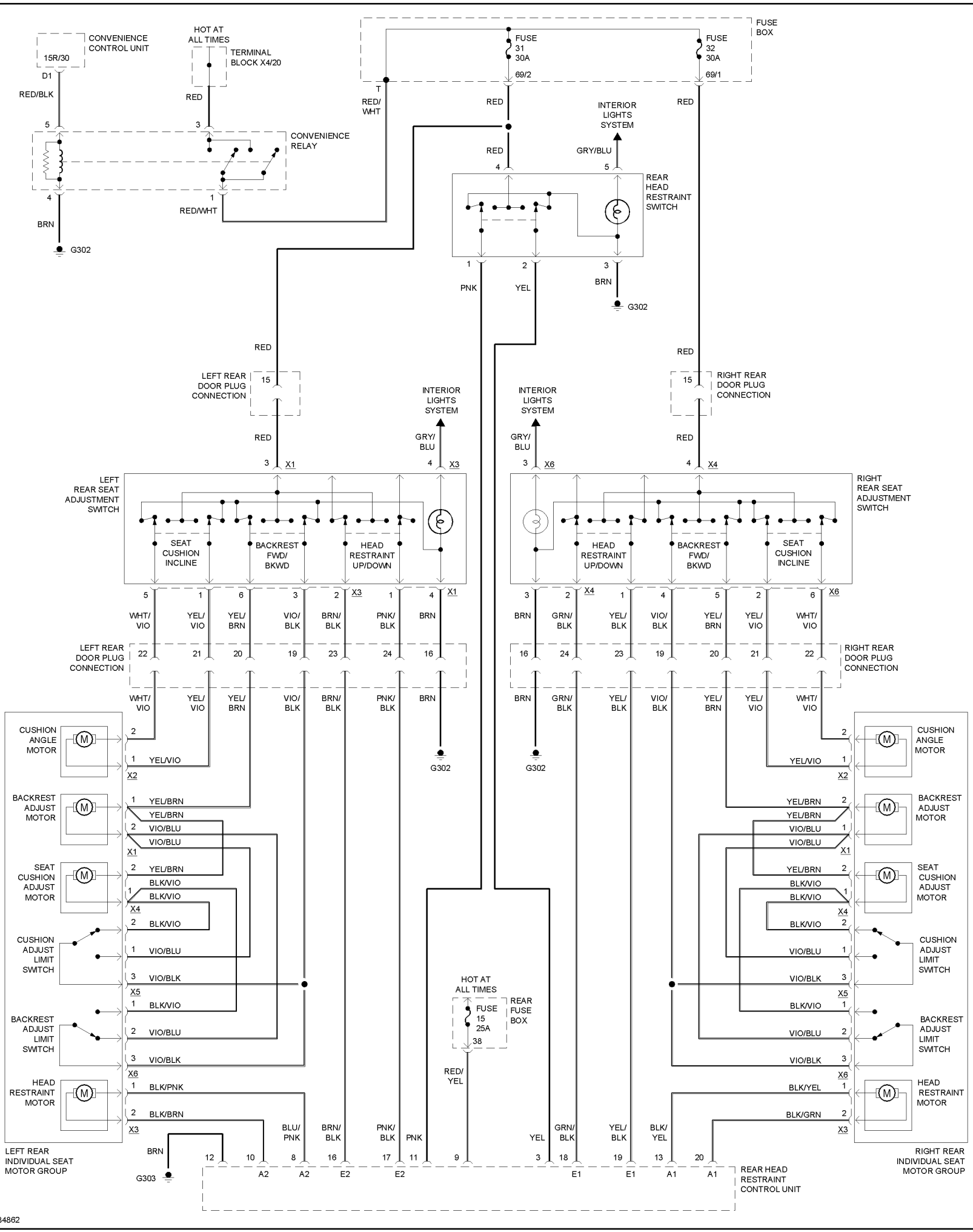
CONVENIENCE CONTROL UNIT
15R/30
D1
RED/BLK
5
HOT AT ALL TIMES
TERMINAL BLOCK X4/20
RED
3
CONVENIENCE RELAY
4
1
RED/WHT
BRN
G302
FUSE BOX
FUSE 31 30A
69/2
FUSE 32 30A
69/1
T
RED/ WHT
RED
INTERIOR LIGHTS SYSTEM
GRY/BLU
5
4
REAR HEAD RESTRAINT SWITCH
1
2
3
PNK
YEL
BRN
G302
LEFT REAR DOOR PLUG CONNECTION
15
RIGHT REAR DOOR PLUG CONNECTION
GRY/ BLU
3
X1
4
X3
3
X6
4
X4
LEFT REAR SEAT ADJUSTMENT SWITCH
SEAT CUSHION INCLINE
BACKREST FWD/ BKWD
HEAD RESTRAINT UP/DOWN
RIGHT REAR SEAT ADJUSTMENT SWITCH
WHT/ VIO
YEL/ VIO
YEL/ BRN
VIO/ BLK
BRN/ BLK
PNK/ BLK
BRN
GRN/ BLK
YEL/ BLK
YEL/ VIO
22
21
20
19
23
24
16
CUSHION ANGLE MOTOR
BACKREST ADJUST MOTOR
SEAT CUSHION ADJUST MOTOR
CUSHION ADJUST LIMIT SWITCH
BACKREST ADJUST LIMIT SWITCH
HEAD RESTRAINT MOTOR
YEL/VIO
YEL/BRN
VIO/BLU
BLK/VIO
VIO/BLK
BLK/PNK
BLK/BRN
X2
X1
X4
X5
X6
X3
HOT AT ALL TIMES
FUSE 15 25A
38
REAR FUSE BOX
RED/ YEL
BLU/ PNK
PNK
YEL
BLK/ YEL
BLK/YEL
BLK/GRN
LEFT REAR INDIVIDUAL SEAT MOTOR GROUP
RIGHT REAR INDIVIDUAL SEAT MOTOR GROUP
G303
12
10
8
16
17
11
9
3
18
19
13
20
A2
E2
E1
A1
REAR HEAD RESTRAINT CONTROL UNIT
84862