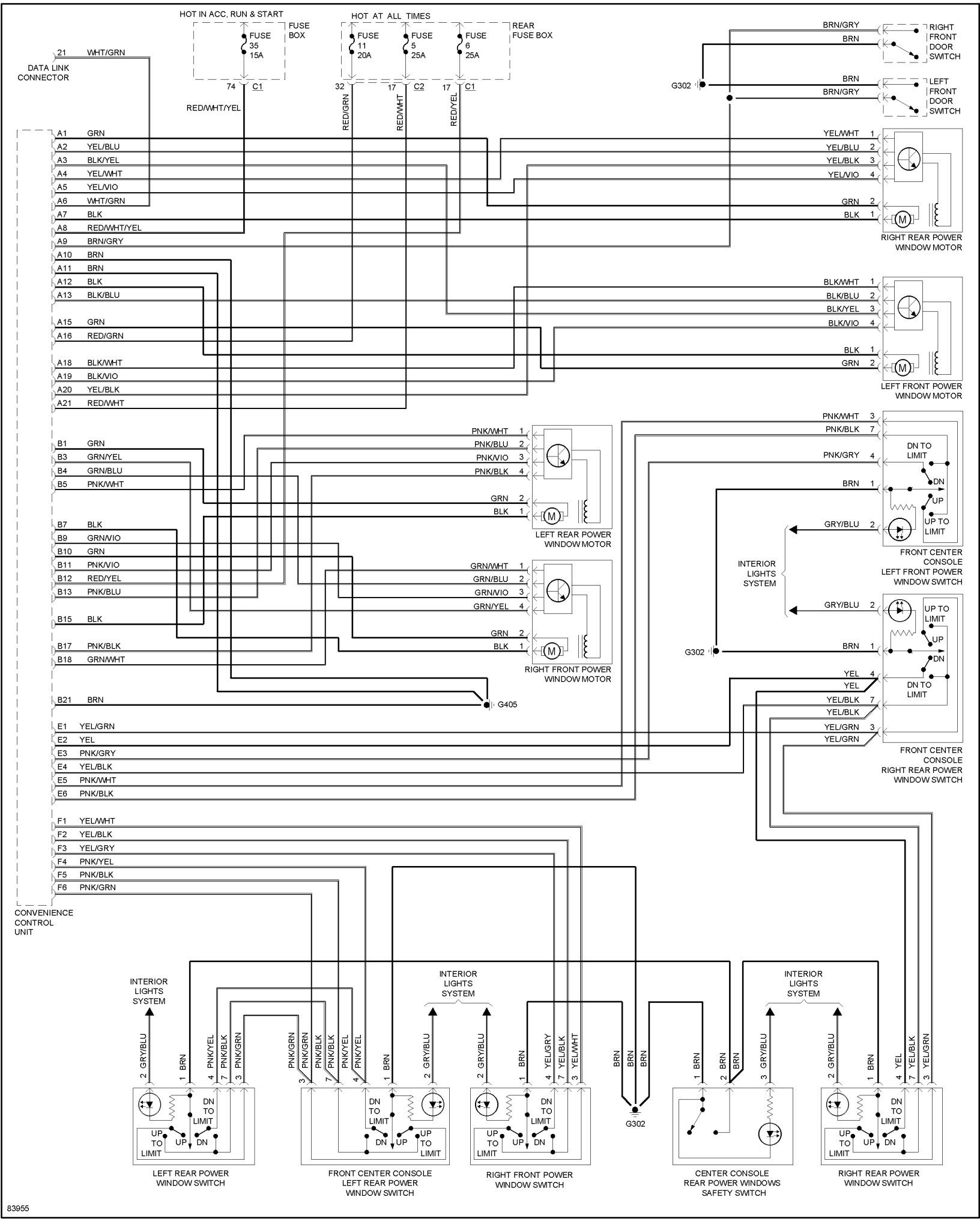
HOT IN ACC, RUN & START
FUSE BOX
FUSE 35 15A
HOT AT ALL TIMES
REAR FUSE BOX
FUSE 11 20A
FUSE 5 25A
FUSE 6 25A
DATA LINK CONNECTOR
21 WHT/GRN
74 C1
32
17 C2
17 C1
RED/WHT/YEL
RED/GRN
RED/WHT
RED/YEL
BRN/GRY
BRN
RIGHT FRONT DOOR SWITCH
G302
BRN
BRN/GRY
LEFT FRONT DOOR SWITCH
A1 GRN
A2 YEL/BLU
A3 BLK/YEL
A4 YEL/WHT
A5 YEL/VIO
A6 WHT/GRN
A7 BLK
A8 RED/WHT/YEL
A9 BRN/GRY
A10 BRN
A11 BRN
A12 BLK
A13 BLK/BLU
A15 GRN
A16 RED/GRN
A18 BLK/WHT
A19 BLK/VIO
A20 YEL/BLK
A21 RED/WHT
YEL/WHT 1
YEL/BLU 2
YEL/BLK 3
YEL/VIO 4
GRN 2
BLK 1
RIGHT REAR POWER WINDOW MOTOR
BLK/WHT 1
BLK/BLU 2
BLK/YEL 3
BLK/VIO 4
BLK 1
GRN 2
LEFT FRONT POWER WINDOW MOTOR
B1 GRN
B3 GRN/YEL
B4 GRN/BLU
B5 PNK/WHT
B7 BLK
B9 GRN/VIO
B10 GRN
B11 PNK/VIO
B12 RED/YEL
B13 PNK/BLU
B15 BLK
B17 PNK/BLK
B18 GRN/WHT
B21 BRN
G405
PNK/WHT 1
PNK/BLU 2
PNK/VIO 3
PNK/BLK 4
GRN 2
BLK 1
LEFT REAR POWER WINDOW MOTOR
GRN/WHT 1
GRN/BLU 2
GRN/VIO 3
GRN/YEL 4
GRN 2
BLK 1
RIGHT FRONT POWER WINDOW MOTOR
PNK/WHT 3
PNK/BLK 7
PNK/GRY 4
BRN 1
GRY/BLU 2
DN TO LIMIT
DN
UP
UP TO LIMIT
FRONT CENTER CONSOLE LEFT FRONT POWER WINDOW SWITCH
INTERIOR LIGHTS SYSTEM
GRY/BLU 2
BRN 1
YEL 4
YEL
YEL/BLK 7
YEL/BLK
YEL/GRN 3
YEL/GRN
FRONT CENTER CONSOLE RIGHT REAR POWER WINDOW SWITCH
E1 YEL/GRN
E2 YEL
E3 PNK/GRY
E4 YEL/BLK
E5 PNK/WHT
E6 PNK/BLK
F1 YEL/WHT
F2 YEL/BLK
F3 YEL/GRY
F4 PNK/YEL
F5 PNK/BLK
F6 PNK/GRN
CONVENIENCE CONTROL UNIT
INTERIOR LIGHTS SYSTEM
2 GRY/BLU
1 BRN
4 PNK/YEL
7 PNK/BLK
3 PNK/GRN
PNK/GRN
PNK/BLK
PNK/YEL
1 BRN
2 GRY/BLU
2 GRY/BLU
1 BRN
4 YEL/GRY
7 YEL/BLK
3 YEL/WHT
BRN
BRN
BRN
G302
1 BRN
2 BRN
BRN
3 GRY/BLU
2 GRY/BLU
1 BRN
4 YEL
7 YEL/BLK
3 YEL/GRN
DN TO LIMIT
UP TO LIMIT
UP
DN
LEFT REAR POWER WINDOW SWITCH
FRONT CENTER CONSOLE LEFT REAR POWER WINDOW SWITCH
RIGHT FRONT POWER WINDOW SWITCH
CENTER CONSOLE REAR POWER WINDOWS SAFETY SWITCH
RIGHT REAR POWER WINDOW SWITCH
83955