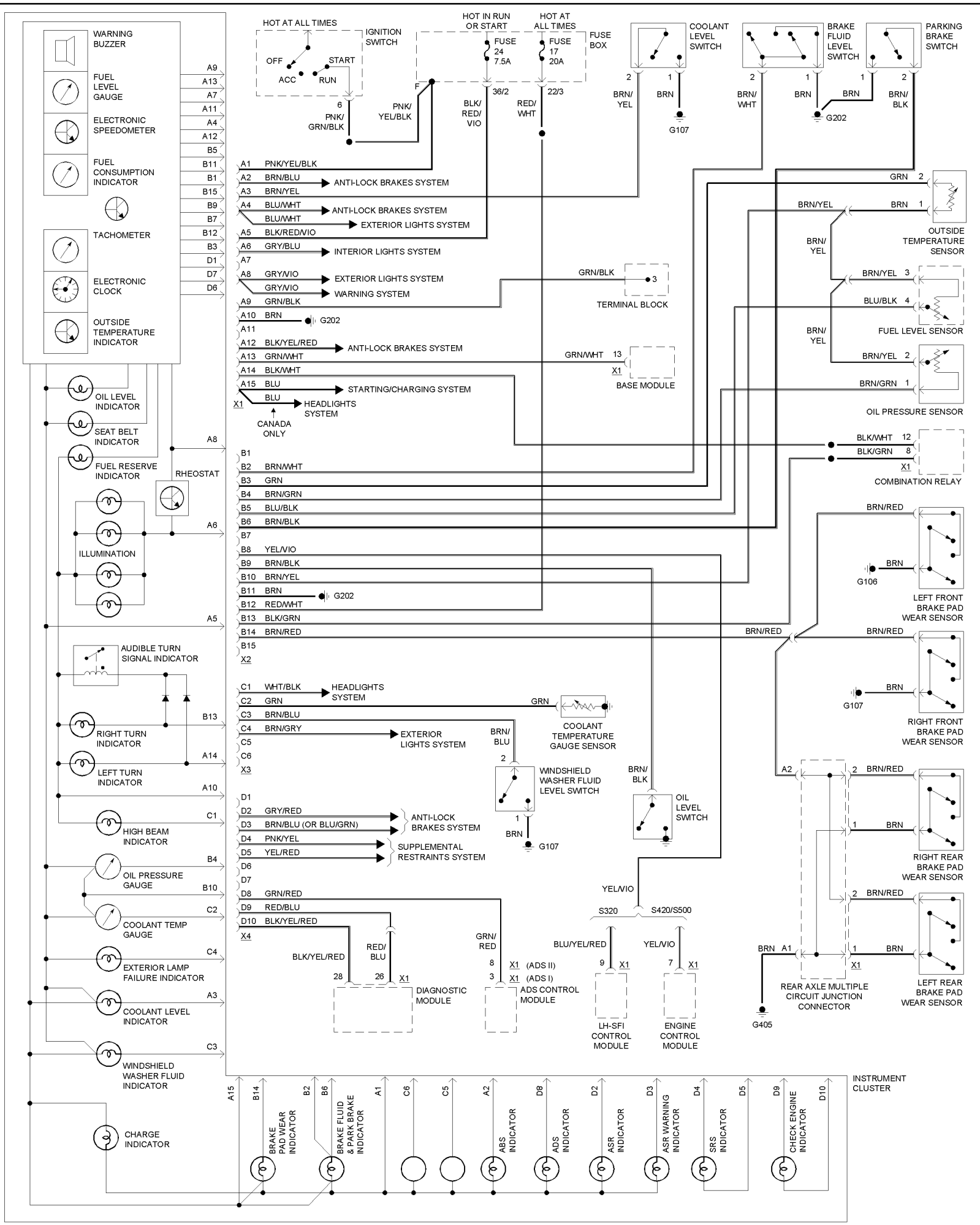
WARNING BUZZER
FUEL LEVEL GAUGE
ELECTRONIC SPEEDOMETER
FUEL CONSUMPTION INDICATOR
TACHOMETER
ELECTRONIC CLOCK
OUTSIDE TEMPERATURE INDICATOR
HOT AT ALL TIMES
IGNITION SWITCH
OFF
ACC
RUN
START
HOT IN RUN OR START
HOT AT ALL TIMES
FUSE 24 7.5A
FUSE 17 20A
FUSE BOX
COOLANT LEVEL SWITCH
BRAKE FLUID LEVEL SWITCH
PARKING BRAKE SWITCH
G107
G202
ANTI-LOCK BRAKES SYSTEM
EXTERIOR LIGHTS SYSTEM
INTERIOR LIGHTS SYSTEM
WARNING SYSTEM
TERMINAL BLOCK
OUTSIDE TEMPERATURE SENSOR
FUEL LEVEL SENSOR
BASE MODULE
OIL PRESSURE SENSOR
STARTING/CHARGING SYSTEM
HEADLIGHTS SYSTEM
CANADA ONLY
COMBINATION RELAY
OIL LEVEL INDICATOR
SEAT BELT INDICATOR
FUEL RESERVE INDICATOR
RHEOSTAT
ILLUMINATION
LEFT FRONT BRAKE PAD WEAR SENSOR
G106
AUDIBLE TURN SIGNAL INDICATOR
RIGHT TURN INDICATOR
LEFT TURN INDICATOR
COOLANT TEMPERATURE GAUGE SENSOR
RIGHT FRONT BRAKE PAD WEAR SENSOR
WINDSHIELD WASHER FLUID LEVEL SWITCH
OIL LEVEL SWITCH
HIGH BEAM INDICATOR
SUPPLEMENTAL RESTRAINTS SYSTEM
RIGHT REAR BRAKE PAD WEAR SENSOR
OIL PRESSURE GAUGE
COOLANT TEMP GAUGE
S320
S420/S500
EXTERIOR LAMP FAILURE INDICATOR
COOLANT LEVEL INDICATOR
DIAGNOSTIC MODULE
ADS CONTROL MODULE
LH-SFI CONTROL MODULE
ENGINE CONTROL MODULE
REAR AXLE MULTIPLE CIRCUIT JUNCTION CONNECTOR
G405
LEFT REAR BRAKE PAD WEAR SENSOR
WINDSHIELD WASHER FLUID INDICATOR
INSTRUMENT CLUSTER
CHARGE INDICATOR
BRAKE PAD WEAR INDICATOR
BRAKE FLUID & PARK BRAKE INDICATOR
ABS INDICATOR
ADS INDICATOR
ASR INDICATOR
ASR WARNING INDICATOR
SRS INDICATOR
CHECK ENGINE INDICATOR

84147