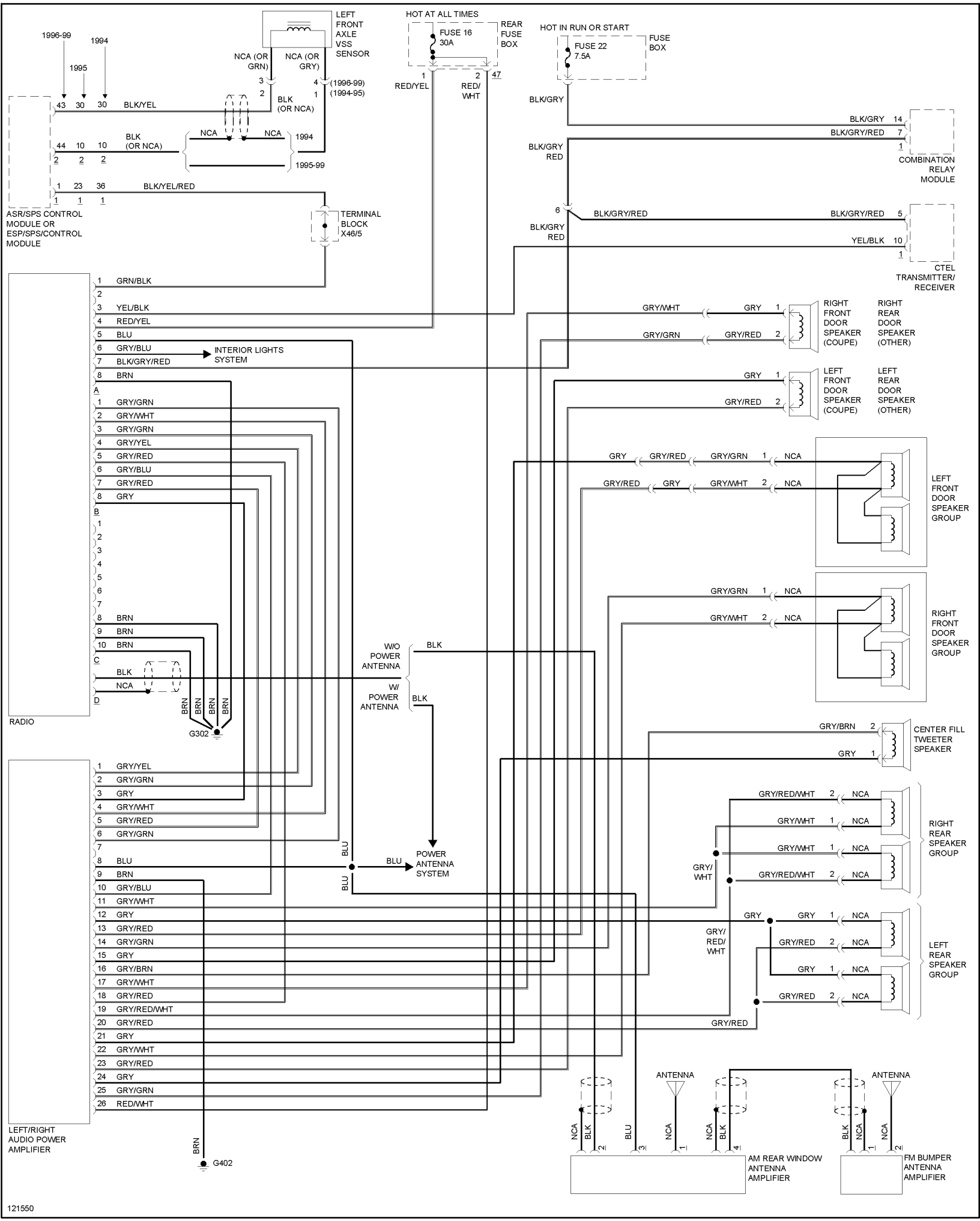
1996-99
1995
1994
LEFT FRONT AXLE VSS SENSOR
NCA (OR GRN)
NCA (OR GRY)
(1996-99)
(1994-95)
BLK (OR NCA)
BLK/YEL
BLK (OR NCA)
NCA
1994
1995-99
BLK/YEL/RED
ASR/SPS CONTROL MODULE OR ESP/SPS/CONTROL MODULE
TERMINAL BLOCK X46/5
HOT AT ALL TIMES
FUSE 16 30A
REAR FUSE BOX
RED/YEL
RED/ WHT
HOT IN RUN OR START
FUSE 22 7.5A
FUSE BOX
BLK/GRY
BLK/GRY 14
BLK/GRY/RED 7
COMBINATION RELAY MODULE
BLK/GRY RED
BLK/GRY/RED
BLK/GRY/RED 5
YEL/BLK 10
CTEL TRANSMITTER/ RECEIVER
GRN/BLK
YEL/BLK
RED/YEL
BLU
GRY/BLU
BLK/GRY/RED
INTERIOR LIGHTS SYSTEM
BRN
GRY/GRN
GRY/WHT
GRY/YEL
GRY/RED
GRY
GRY/WHT
GRY/RED
RIGHT FRONT DOOR SPEAKER (COUPE)
RIGHT REAR DOOR SPEAKER (OTHER)
LEFT FRONT DOOR SPEAKER (COUPE)
LEFT REAR DOOR SPEAKER (OTHER)
GRY/RED/GRN
GRY/RED/WHT
LEFT FRONT DOOR SPEAKER GROUP
RIGHT FRONT DOOR SPEAKER GROUP
W/O POWER ANTENNA
W/ POWER ANTENNA
BLK
NCA
RADIO
G302
CENTER FILL TWEETER SPEAKER
GRY/BRN
GRY/YEL
GRY/BLU
GRY/BRN
RIGHT REAR SPEAKER GROUP
LEFT REAR SPEAKER GROUP
POWER ANTENNA SYSTEM
LEFT/RIGHT AUDIO POWER AMPLIFIER
G402
ANTENNA
AM REAR WINDOW ANTENNA AMPLIFIER
FM BUMPER ANTENNA AMPLIFIER
121550