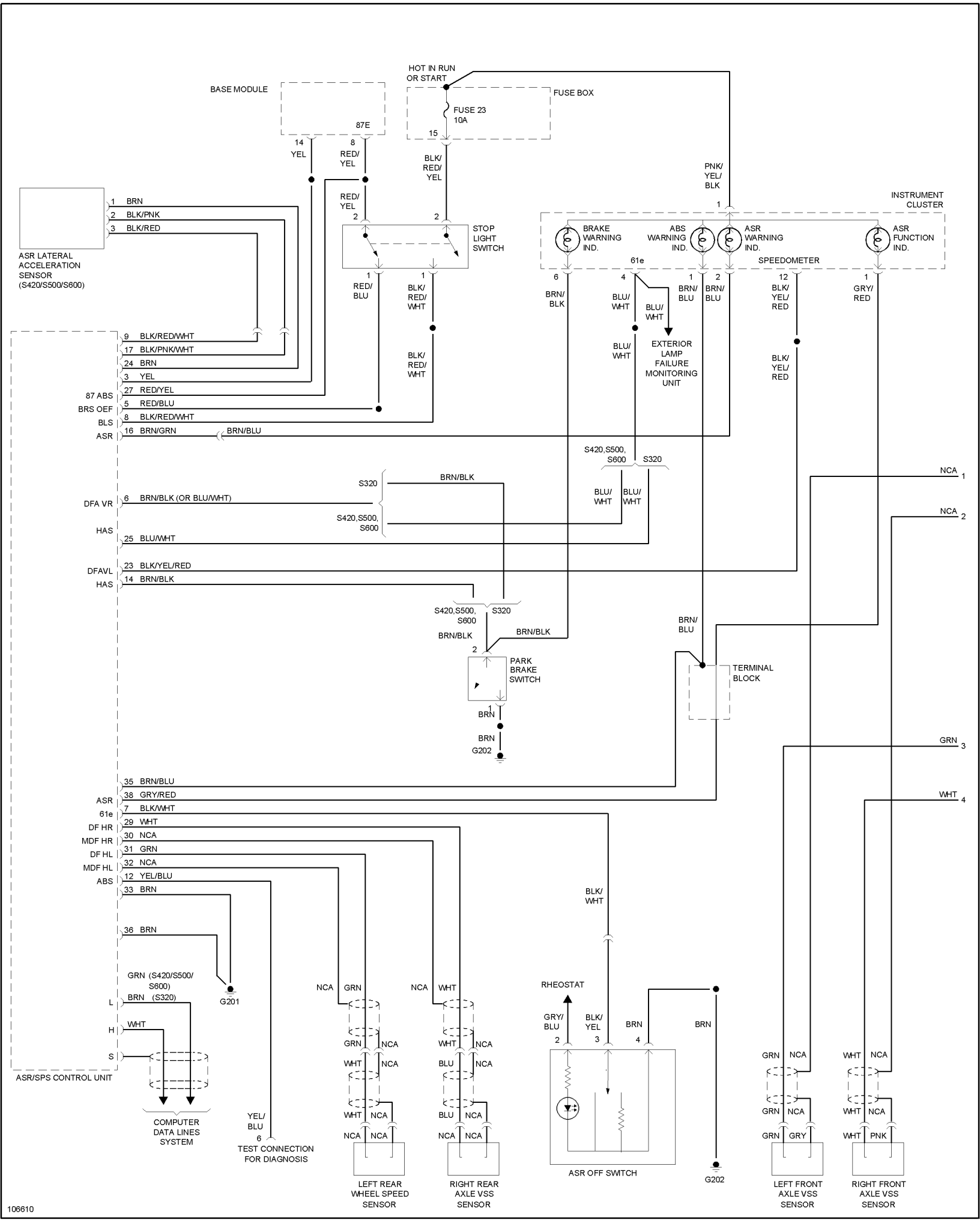
BASE MODULE
87E
14 YEL
8 RED/YEL
HOT IN RUN OR START
FUSE BOX
FUSE 23 10A
15
BLK/RED/YEL
PNK/YEL/BLK
1
INSTRUMENT CLUSTER
ASR LATERAL ACCELERATION SENSOR (S420/S500/S600)
1 BRN
2 BLK/PNK
3 BLK/RED
RED/YEL
2
2
STOP LIGHT SWITCH
1 RED/BLU
1 BLK/RED/WHT
BRAKE WARNING IND.
ABS WARNING IND.
ASR WARNING IND.
ASR FUNCTION IND.
61e
SPEEDOMETER
6 BRN/BLK
4 BLU/WHT
1 BRN/BLU
2 BRN/BLU
12 BLK/YEL/RED
1 GRY/RED
BLU/WHT
EXTERIOR LAMP FAILURE MONITORING UNIT
BLK/RED/WHT
BLK/YEL/RED
9 BLK/RED/WHT
17 BLK/PNK/WHT
24 BRN
3 YEL
27 RED/YEL
87 ABS
5 RED/BLU
BRS OEF
8 BLK/RED/WHT
BLS
16 BRN/GRN
BRN/BLU
ASR
S420,S500, S600
S320
BLU/WHT
BLU/WHT
NCA 1
S320
BRN/BLK
DFA VR
6 BRN/BLK (OR BLU/WHT)
S420,S500, S600
NCA 2
HAS
25 BLU/WHT
DFAVL
23 BLK/YEL/RED
HAS
14 BRN/BLK
S420,S500, S600
S320
BRN/BLK
BRN/BLK
2
BRN/BLU
PARK BRAKE SWITCH
TERMINAL BLOCK
1
BRN
BRN
G202
GRN 3
35 BRN/BLU
ASR
38 GRY/RED
WHT 4
61e
7 BLK/WHT
DF HR
29 WHT
MDF HR
30 NCA
DF HL
31 GRN
MDF HL
32 NCA
ABS
12 YEL/BLU
33 BRN
BLK/WHT
36 BRN
GRN (S420/S500/S600)
BRN (S320)
G201
L
H
S
ASR/SPS CONTROL UNIT
COMPUTER DATA LINES SYSTEM
YEL/BLU
6
TEST CONNECTION FOR DIAGNOSIS
NCA GRN
NCA WHT
GRN NCA
WHT NCA
WHT NCA
BLU NCA
WHT NCA
BLU NCA
NCA NCA
NCA NCA
LEFT REAR WHEEL SPEED SENSOR
RIGHT REAR AXLE VSS SENSOR
RHEOSTAT
GRY/BLU
2
BLK/YEL
3
BRN
4
BRN
ASR OFF SWITCH
G202
GRN NCA
GRN NCA
GRN GRY
WHT NCA
WHT NCA
WHT PNK
LEFT FRONT AXLE VSS SENSOR
RIGHT FRONT AXLE VSS SENSOR
106610