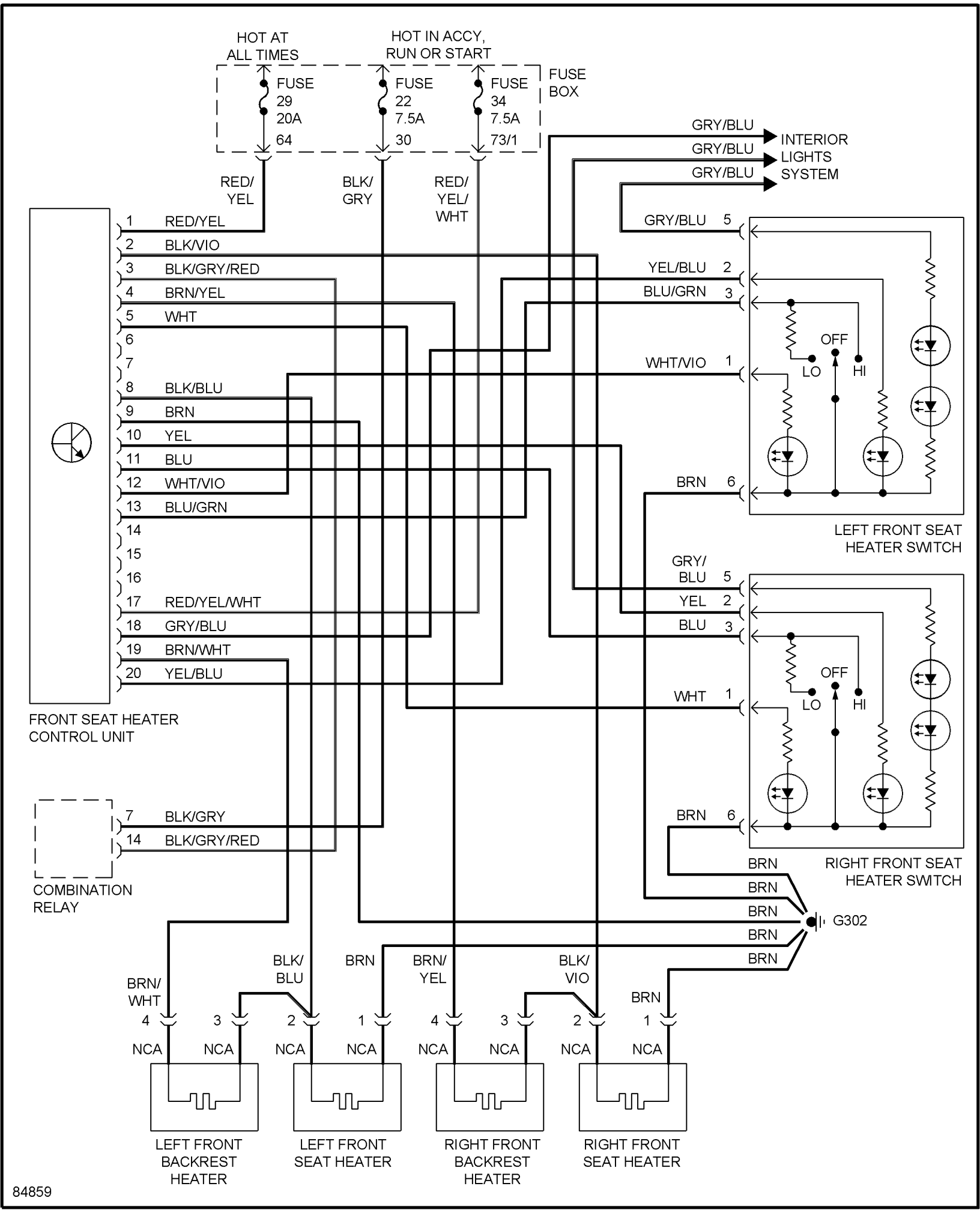
HOT AT ALL TIMES
HOT IN ACCY, RUN OR START
FUSE BOX
FUSE 29 20A
FUSE 22 7.5A
FUSE 34 7.5A
64
30
73/1
RED/YEL
BLK/GRY
RED/YEL/WHT
GRY/BLU
INTERIOR LIGHTS SYSTEM
1 RED/YEL
2 BLK/VIO
3 BLK/GRY/RED
4 BRN/YEL
5 WHT
6
7
8 BLK/BLU
9 BRN
10 YEL
11 BLU
12 WHT/VIO
13 BLU/GRN
14
15
16
17 RED/YEL/WHT
18 GRY/BLU
19 BRN/WHT
20 YEL/BLU
FRONT SEAT HEATER CONTROL UNIT
GRY/BLU 5
YEL/BLU 2
BLU/GRN 3
WHT/VIO 1
BRN 6
OFF
LO
HI
LEFT FRONT SEAT HEATER SWITCH
GRY/BLU 5
YEL 2
BLU 3
WHT 1
BRN 6
RIGHT FRONT SEAT HEATER SWITCH
7 BLK/GRY
14 BLK/GRY/RED
COMBINATION RELAY
BRN
G302
BRN/WHT
BLK/BLU
BRN
BRN/YEL
BLK/VIO
BRN
4 3 2 1 4 3 2 1
NCA
LEFT FRONT BACKREST HEATER
LEFT FRONT SEAT HEATER
RIGHT FRONT BACKREST HEATER
RIGHT FRONT SEAT HEATER
84859