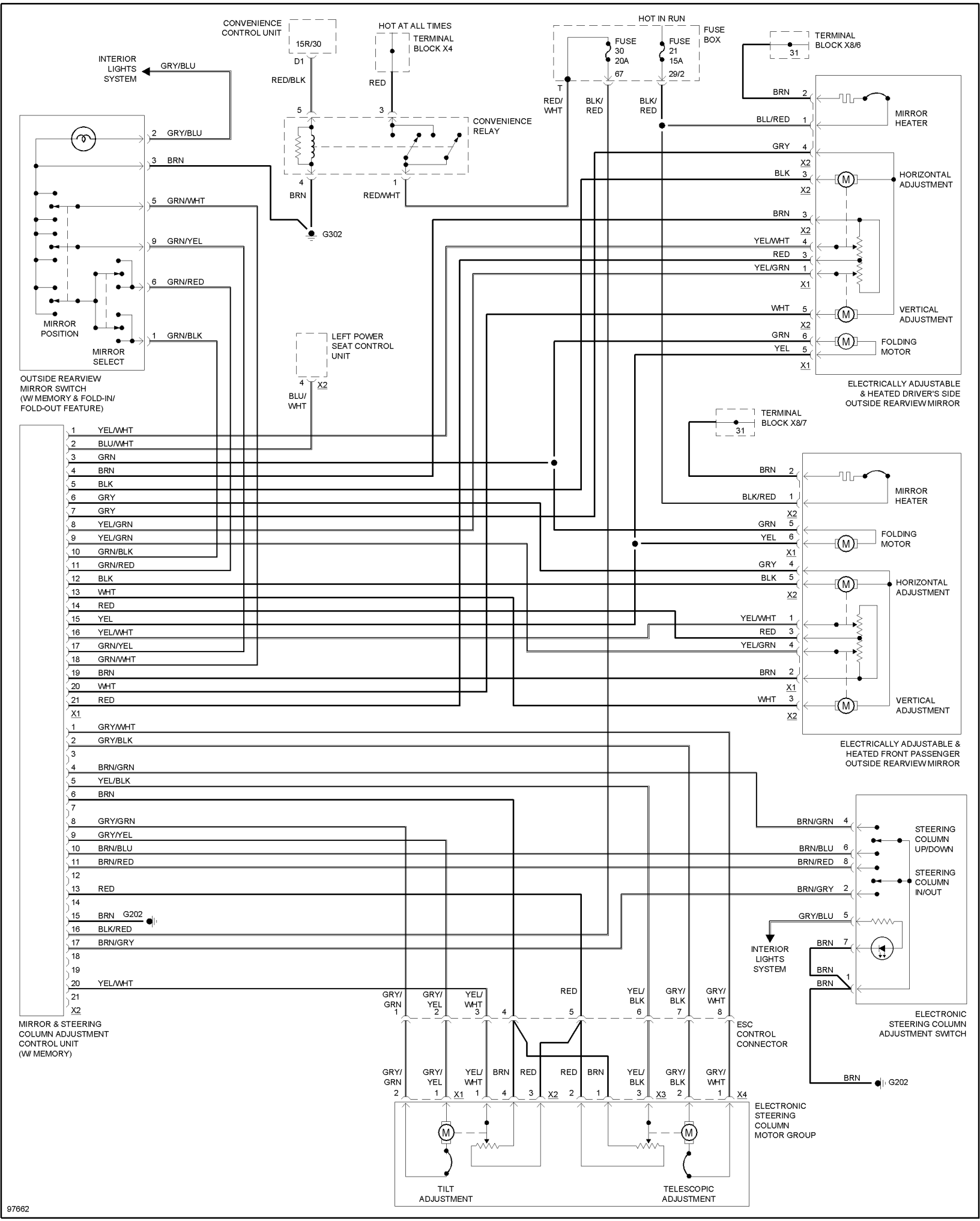
CONVENIENCE CONTROL UNIT
15R/30
D1
RED/BLK
5
HOT AT ALL TIMES
TERMINAL BLOCK X4
RED
3
CONVENIENCE RELAY
4
BRN
1
RED/WHT
G302
INTERIOR LIGHTS SYSTEM
GRY/BLU
HOT IN RUN
FUSE BOX
FUSE 30 20A 67
FUSE 21 15A 29/2
T
RED/ WHT
BLK/ RED
BLK/ RED
TERMINAL BLOCK X8/6
31
BRN 2
BLL/RED 1
MIRROR HEATER
GRY 4
X2
BLK 3
X2
HORIZONTAL ADJUSTMENT
BRN 3
X2
YEL/WHT 4
RED 3
YEL/GRN 1
X1
WHT 5
X2
VERTICAL ADJUSTMENT
GRN 6
YEL 5
X1
FOLDING MOTOR
ELECTRICALLY ADJUSTABLE & HEATED DRIVER'S SIDE OUTSIDE REARVIEW MIRROR
2 GRY/BLU
3 BRN
5 GRN/WHT
9 GRN/YEL
6 GRN/RED
1 GRN/BLK
MIRROR POSITION
MIRROR SELECT
OUTSIDE REARVIEW MIRROR SWITCH (W/ MEMORY & FOLD-IN/ FOLD-OUT FEATURE)
LEFT POWER SEAT CONTROL UNIT
4
X2
BLU/ WHT
TERMINAL BLOCK X8/7
31
BRN 2
BLK/RED 1
MIRROR HEATER
X2
GRN 5
YEL 6
X1
FOLDING MOTOR
GRY 4
BLK 5
X2
HORIZONTAL ADJUSTMENT
YEL/WHT 1
RED 3
YEL/GRN 4
BRN 2
X1
WHT 3
X2
VERTICAL ADJUSTMENT
ELECTRICALLY ADJUSTABLE & HEATED FRONT PASSENGER OUTSIDE REARVIEW MIRROR
1 YEL/WHT
2 BLU/WHT
3 GRN
4 BRN
5 BLK
6 GRY
7 GRY
8 YEL/GRN
9 YEL/GRN
10 GRN/BLK
11 GRN/RED
12 BLK
13 WHT
14 RED
15 YEL
16 YEL/WHT
17 GRN/YEL
18 GRN/WHT
19 BRN
20 WHT
21 RED
X1
1 GRY/WHT
2 GRY/BLK
3
4 BRN/GRN
5 YEL/BLK
6 BRN
7
8 GRY/GRN
9 GRY/YEL
10 BRN/BLU
11 BRN/RED
12
13 RED
14
15 BRN G202
16 BLK/RED
17 BRN/GRY
18
19
20 YEL/WHT
21
X2
MIRROR & STEERING COLUMN ADJUSTMENT CONTROL UNIT (W/ MEMORY)
BRN/GRN 4
BRN/BLU 6
BRN/RED 8
BRN/GRY 2
GRY/BLU 5
STEERING COLUMN UP/DOWN
STEERING COLUMN IN/OUT
INTERIOR LIGHTS SYSTEM
BRN 7
BRN
BRN 1
BRN
G202
ELECTRONIC STEERING COLUMN ADJUSTMENT SWITCH
GRY/ GRN 1
GRY/ YEL 2
YEL/ WHT 3
4
RED 5
YEL/ BLK 6
GRY/ BLK 7
GRY/ WHT 8
ESC CONTROL CONNECTOR
GRY/ GRN 2
GRY/ YEL 1
X1
YEL/ WHT 1
BRN 4
RED 3
X2
RED 2
BRN 1
YEL/ BLK 3
X3
GRY/ BLK 2
GRY/ WHT 1
X4
ELECTRONIC STEERING COLUMN MOTOR GROUP
TILT ADJUSTMENT
TELESCOPIC ADJUSTMENT
97662