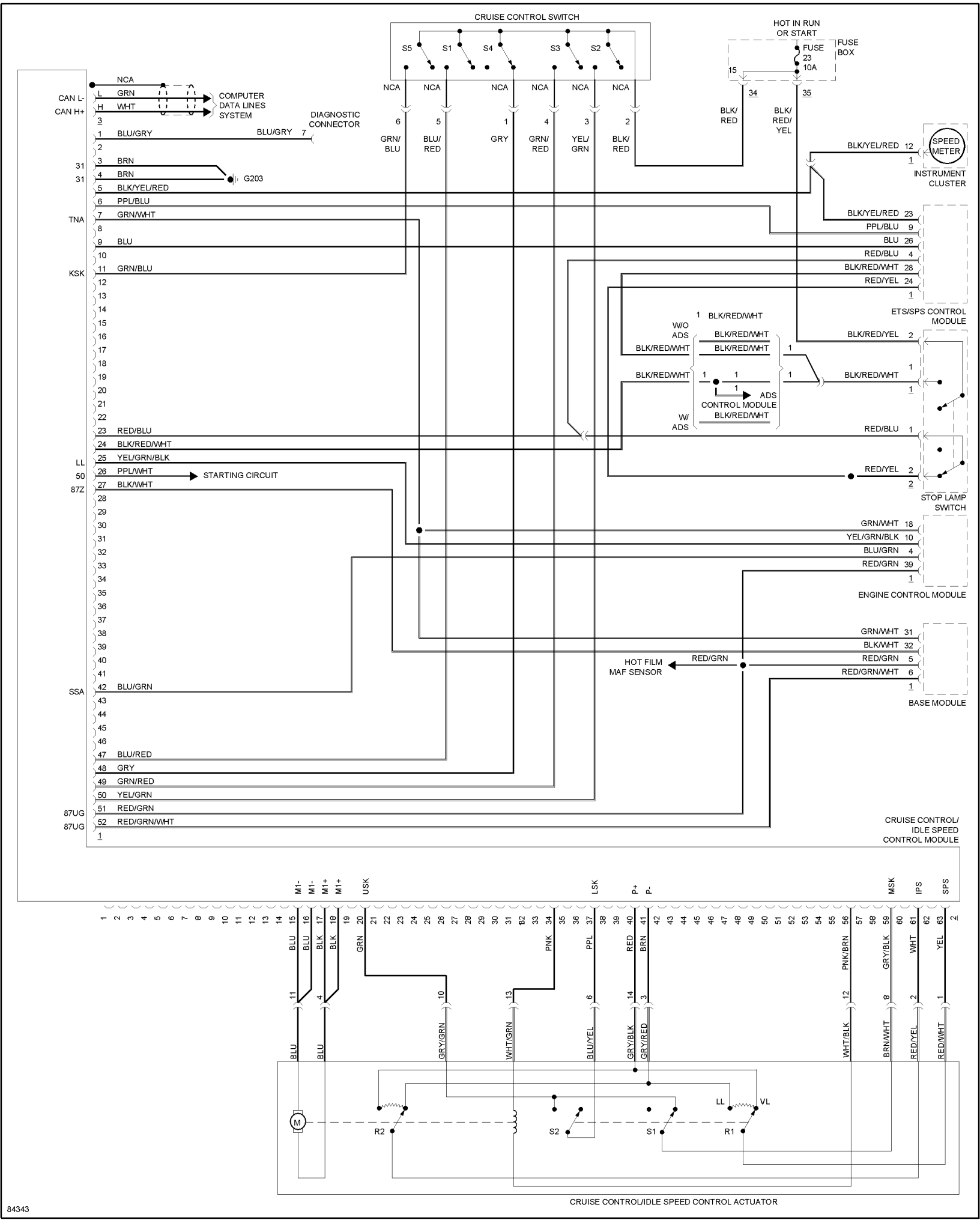
CRUISE CONTROL SWITCH
S5
S1
S4
S3
S2
HOT IN RUN OR START
FUSE BOX
FUSE 23 10A
15
34
35
NCA
CAN L-
CAN H+
L GRN
H WHT
COMPUTER DATA LINES SYSTEM
DIAGNOSTIC CONNECTOR
BLU/GRY
GRN/BLU
BLU/RED
GRY
GRN/RED
YEL/GRN
BLK/RED
BLK/RED
BLK/RED/YEL
BRN
G203
BLK/YEL/RED
PPL/BLU
GRN/WHT
TNA
BLU
KSK
GRN/BLU
SPEED METER
INSTRUMENT CLUSTER
ETS/SPS CONTROL MODULE
BLK/RED/WHT
W/O ADS
W/ ADS
ADS CONTROL MODULE
RED/BLU
RED/YEL
STOP LAMP SWITCH
LL
YEL/GRN/BLK
50
PPL/WHT
STARTING CIRCUIT
87Z
BLK/WHT
GRN/WHT
BLU/GRN
RED/GRN
ENGINE CONTROL MODULE
HOT FILM MAF SENSOR
RED/GRN/WHT
SSA
BASE MODULE
BLU/RED
GRY
GRN/RED
YEL/GRN
87UG
CRUISE CONTROL/ IDLE SPEED CONTROL MODULE
M1-
M1+
USK
LSK
P+
P-
MSK
IPS
SPS
PNK
PPL
RED
BRN
PNK/BRN
GRY/BLK
WHT
YEL
GRY/GRN
WHT/GRN
BLU/YEL
GRY/RED
WHT/BLK
BRN/WHT
RED/YEL
RED/WHT
M
R2
S2
S1
R1
LL
VL
CRUISE CONTROL/IDLE SPEED CONTROL ACTUATOR
84343