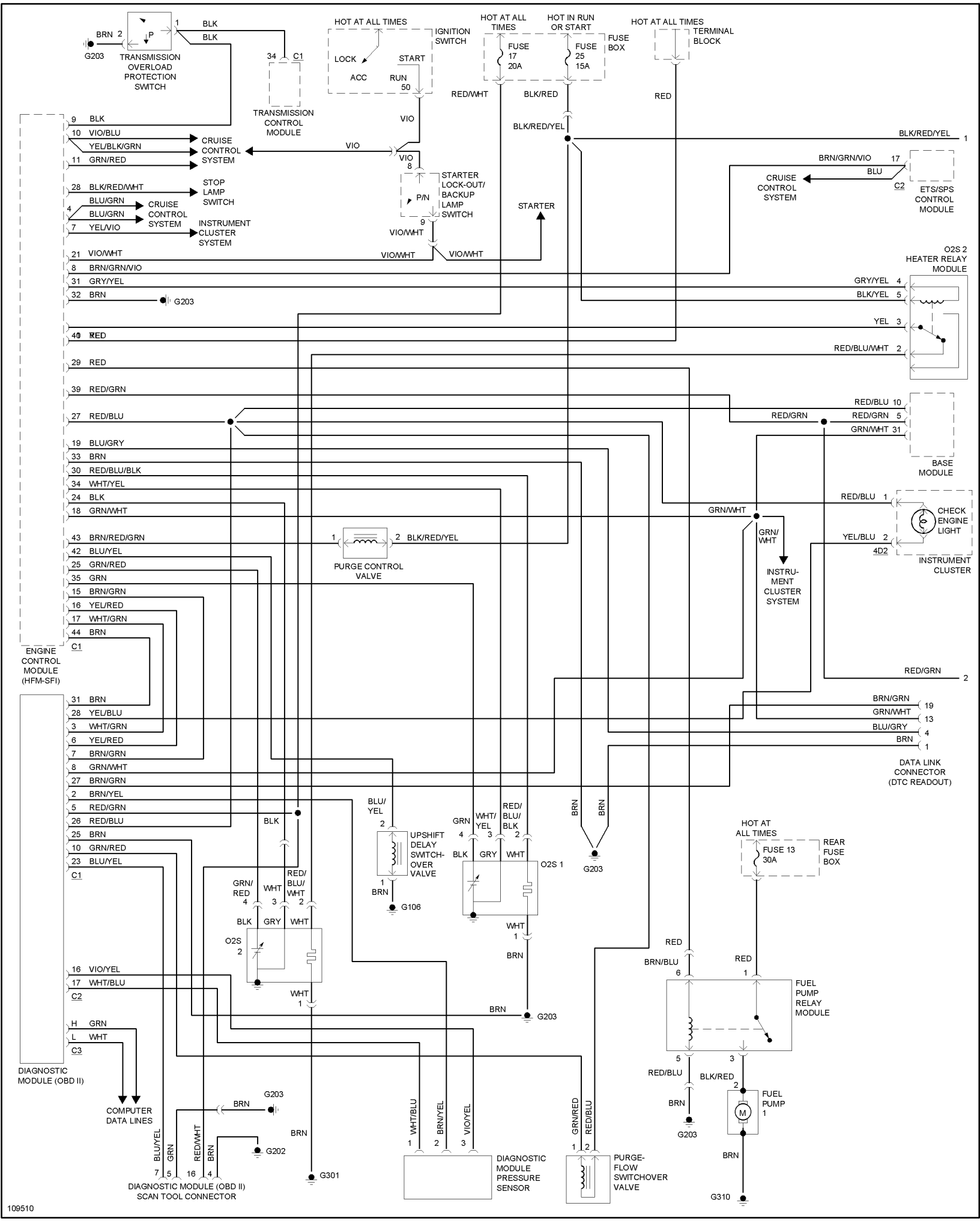
TRANSMISSION OVERLOAD PROTECTION SWITCH
G203
BRN 2
P
1
BLK
BLK
34 C1
TRANSMISSION CONTROL MODULE
HOT AT ALL TIMES
IGNITION SWITCH
LOCK
START
ACC
RUN
50
HOT AT ALL TIMES
HOT IN RUN OR START
FUSE 17 20A
FUSE 25 15A
FUSE BOX
HOT AT ALL TIMES
TERMINAL BLOCK
RED/WHT
BLK/RED
RED
VIO
BLK/RED/YEL
BLK/RED/YEL 1
9 BLK
10 VIO/BLU
YEL/BLK/GRN
11 GRN/RED
CRUISE CONTROL SYSTEM
VIO
VIO 8
STARTER LOCK-OUT/ BACKUP LAMP SWITCH
P/N
9
VIO/WHT
28 BLK/RED/WHT
STOP LAMP SWITCH
4 BLU/GRN
BLU/GRN
CRUISE CONTROL SYSTEM
7 YEL/VIO
INSTRUMENT CLUSTER SYSTEM
STARTER
BRN/GRN/VIO 17
BLU
CRUISE CONTROL SYSTEM
C2
ETS/SPS CONTROL MODULE
21 VIO/WHT
VIO/WHT
VIO/WHT
8 BRN/GRN/VIO
31 GRY/YEL
32 BRN
G203
O2S 2 HEATER RELAY MODULE
GRY/YEL 4
BLK/YEL 5
YEL 3
40 RED
RED/BLU/WHT 2
29 RED
39 RED/GRN
27 RED/BLU
RED/BLU 10
RED/GRN 5
RED/GRN
GRN/WHT 31
BASE MODULE
19 BLU/GRY
33 BRN
30 RED/BLU/BLK
34 WHT/YEL
24 BLK
18 GRN/WHT
RED/BLU 1
GRN/WHT
CHECK ENGINE LIGHT
43 BRN/RED/GRN
1
2 BLK/RED/YEL
PURGE CONTROL VALVE
GRN/ WHT
YEL/BLU 2
4D2
INSTRUMENT CLUSTER
INSTRU-MENT CLUSTER SYSTEM
42 BLU/YEL
25 GRN/RED
35 GRN
15 BRN/GRN
16 YEL/RED
17 WHT/GRN
44 BRN
C1
ENGINE CONTROL MODULE (HFM-SFI)
RED/GRN 2
31 BRN
28 YEL/BLU
3 WHT/GRN
6 YEL/RED
7 BRN/GRN
8 GRN/WHT
27 BRN/GRN
2 BRN/YEL
5 RED/GRN
26 RED/BLU
BRN/GRN 19
GRN/WHT 13
BLU/GRY 4
BRN 1
DATA LINK CONNECTOR (DTC READOUT)
BLU/ YEL
2
UPSHIFT DELAY SWITCH-OVER VALVE
1
BRN
G106
GRN 4
WHT/ YEL 3
RED/ BLU/ BLK 2
BLK
GRY
WHT
O2S 1
BRN
BRN
G203
BLK
25 BRN
10 GRN/RED
23 BLU/YEL
C1
GRN/ RED 4
WHT 3
RED/ BLU/ WHT 2
BLK
GRY
WHT
O2S 2
WHT 1
BRN
HOT AT ALL TIMES
FUSE 13 30A
REAR FUSE BOX
16 VIO/YEL
17 WHT/BLU
C2
WHT 1
BRN
G203
RED
BRN/BLU 6
RED 1
FUEL PUMP RELAY MODULE
H GRN
L WHT
C3
DIAGNOSTIC MODULE (OBD II)
5
3
RED/BLU
BLK/RED 2
FUEL PUMP 1
BRN
G203
COMPUTER DATA LINES
G203
BRN
BRN
G202
BLU/YEL
GRN
RED/WHT
BRN
7
5
16
4
DIAGNOSTIC MODULE (OBD II) SCAN TOOL CONNECTOR
G301
WHT/BLU 1
BRN/YEL 2
VIO/YEL 3
DIAGNOSTIC MODULE PRESSURE SENSOR
GRN/RED
RED/BLU
1
2
PURGE-FLOW SWITCHOVER VALVE
BRN
G310
109510