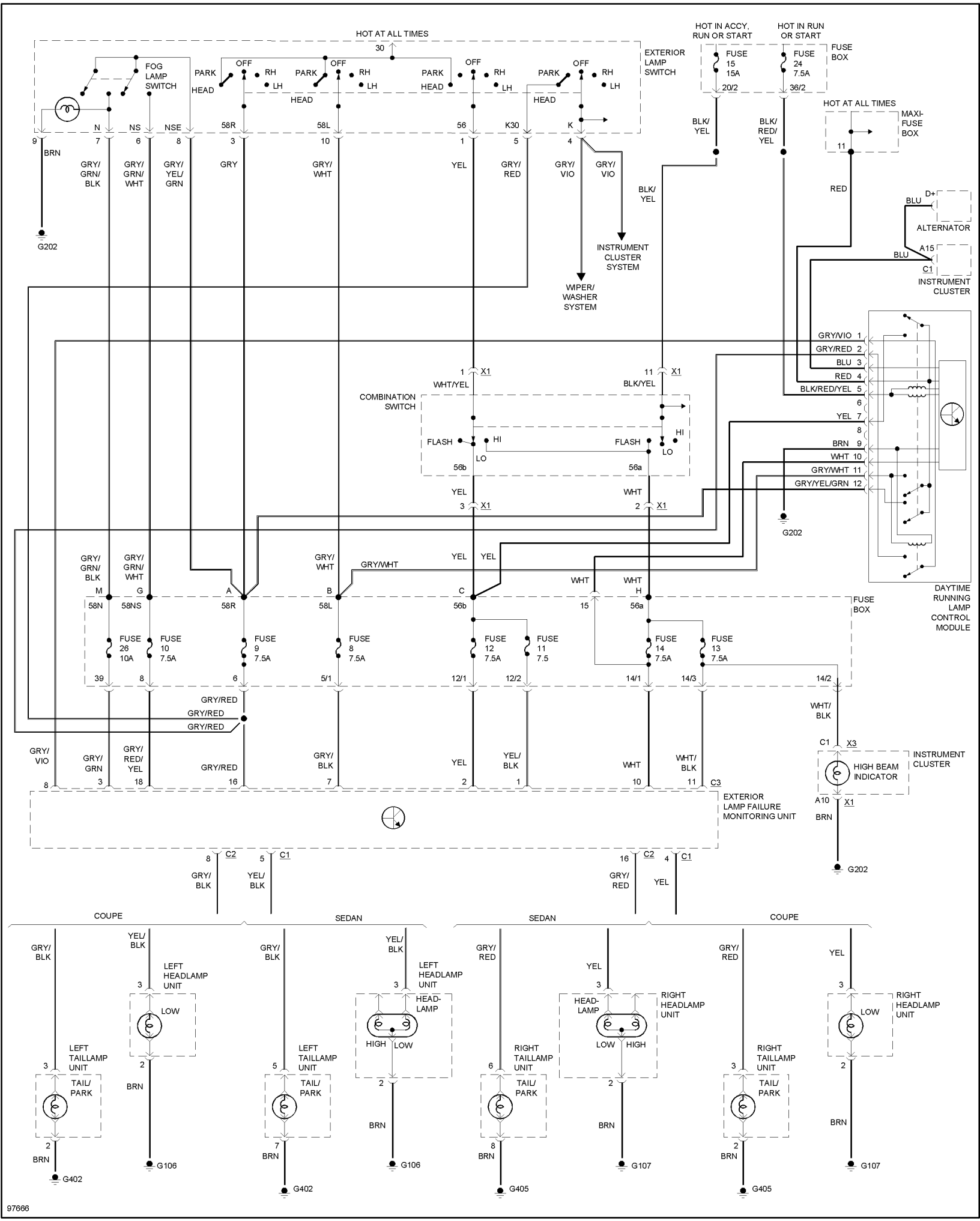
HOT AT ALL TIMES
30
EXTERIOR LAMP SWITCH
FOG LAMP SWITCH
PARK
HEAD
OFF
RH
LH
N
NS
NSE
58R
58L
56
K30
K
9
7
6
8
3
10
1
5
4
BRN
GRY/ GRN/ BLK
GRY/ GRN/ WHT
GRY/ YEL/ GRN
GRY
GRY/ WHT
YEL
GRY/ RED
GRY/ VIO
GRY/ VIO
G202
INSTRUMENT CLUSTER SYSTEM
WIPER/ WASHER SYSTEM
HOT IN ACCY, RUN OR START
HOT IN RUN OR START
FUSE BOX
FUSE 15 15A
FUSE 24 7.5A
20/2
36/2
BLK/ YEL
BLK/ RED/ YEL
HOT AT ALL TIMES
MAXI-FUSE BOX
11
RED
BLK/ YEL
D+
BLU
ALTERNATOR
A15
BLU
C1
INSTRUMENT CLUSTER
GRY/VIO 1
GRY/RED 2
BLU 3
RED 4
BLK/RED/YEL 5
6
YEL 7
8
BRN 9
WHT 10
GRY/WHT 11
GRY/YEL/GRN 12
1 X1
WHT/YEL
11 X1
BLK/YEL
COMBINATION SWITCH
FLASH
HI
LO
56b
56a
YEL
3 X1
WHT
2 X1
G202
GRY/ GRN/ BLK
GRY/ GRN/ WHT
GRY/ WHT
GRY/WHT
YEL
YEL
WHT
WHT
M
G
A
B
C
15
H
58N
58NS
58R
58L
56b
56a
FUSE BOX
DAYTIME RUNNING LAMP CONTROL MODULE
FUSE 26 10A
FUSE 10 7.5A
FUSE 9 7.5A
FUSE 8 7.5A
FUSE 12 7.5A
FUSE 11 7.5
FUSE 14 7.5A
FUSE 13 7.5A
39
8
6
5/1
12/1
12/2
14/1
14/3
14/2
GRY/RED
GRY/RED
GRY/RED
WHT/ BLK
C1
X3
INSTRUMENT CLUSTER
HIGH BEAM INDICATOR
A10
X1
BRN
G202
GRY/ VIO
GRY/ GRN
GRY/ RED/ YEL
GRY/RED
GRY/ BLK
YEL
YEL/ BLK
WHT
WHT/ BLK
8
3
18
16
7
2
1
10
11
C3
EXTERIOR LAMP FAILURE MONITORING UNIT
8
C2
5
C1
GRY/ BLK
YEL/ BLK
16
C2
4
C1
GRY/ RED
YEL
COUPE
SEDAN
SEDAN
COUPE
GRY/ BLK
YEL/ BLK
LEFT HEADLAMP UNIT
3
LOW
LEFT TAILLAMP UNIT
3
TAIL/ PARK
2
BRN
2
BRN
G402
BRN
G106
GRY/ BLK
YEL/ BLK
LEFT HEADLAMP UNIT
3
HEAD-LAMP
HIGH
LOW
LEFT TAILLAMP UNIT
5
TAIL/ PARK
7
BRN
2
BRN
G402
G106
GRY/ RED
YEL
3
HEAD-LAMP
RIGHT HEADLAMP UNIT
LOW
HIGH
RIGHT TAILLAMP UNIT
6
TAIL/ PARK
8
BRN
2
BRN
G405
G107
GRY/ RED
YEL
3
RIGHT HEADLAMP UNIT
LOW
RIGHT TAILLAMP UNIT
3
TAIL/ PARK
2
BRN
2
BRN
G405
G107
97666